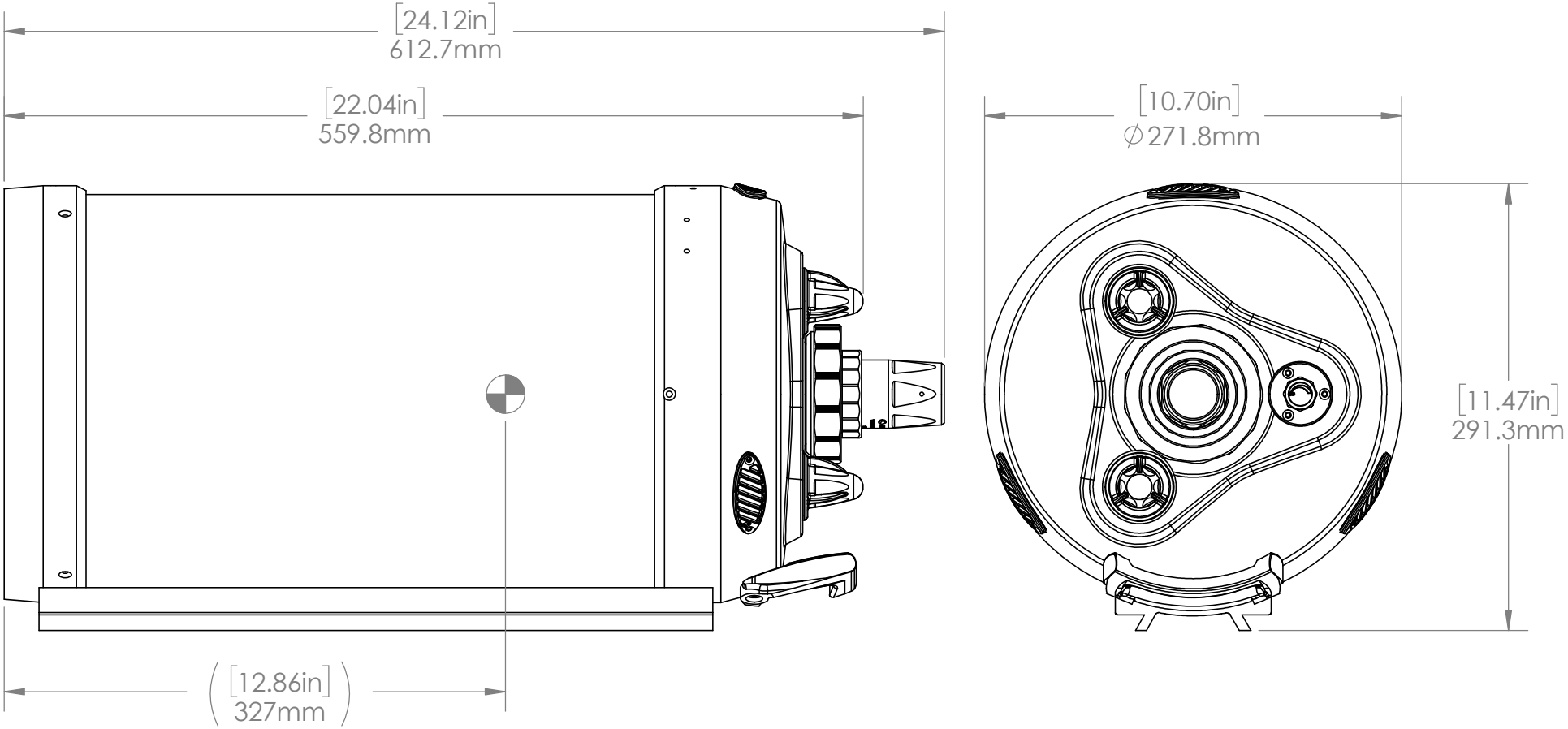


| UNLESS OTHERWISE SPECIFIED: | THIRD ANGLE PROJECTION | NAME | DATE |
|---|---|---|---|
| DIMENSIONS ARE IN MILLIMETER<br>TOLERANCES:<br>FRACTIONAL ±<br>ANGULAR: MACH ±0.50<br>TWO PLACE DECIMAL ±0.20<br>THREE PLACE DECIMAL ±0.005 | DRAWN | WM | 10/06/20 |
| | CHECKED | | |
| | ENG APPR. | | |
| | MFG APPR. | | |
| INTERPRET GEOMETRIC TOLERANCING PER: 25.00 mm | Q.A. | | |
| MATERIAL | COMMENTS: | | |
| FINISH | | | |
| DO NOT SCALE DRAWING | C/Ref: | | |

**PROPRIETARY AND CONFIDENTIAL**

THE INFORMATION CONTAINED IN THIS DRAWING IS THE SOLE PROPERTY OF CELESTRON, LLC. ANY REPRODUCTION IN PART OR AS A WHOLE WITHOUT THE WRITTEN PERMISSION OF CELESTRON, LLC IS PROHIBITED.

CELESTRON
2835 Columbia St.
Torrance, CA 90503

TITLE:

# 9.25" OSCT OTA Dimension

| SIZE | DWG. NO. | REV |
|---|---|---|
| A | OSCT9.25 rev B | |

| SCALE: 1:8 | WEIGHT: | SHEET 1 OF 1 |
|---|---|---|

5 4 3 2 1